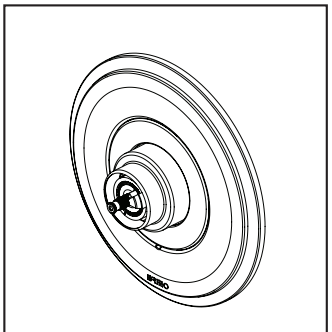

T66T042-▲LHP

BRIZO®

SENSORI® THERMOSTATIC VALVE TRIM

■ Atavis® Collection
■ Thermostatic Control Trim

FEATURES:

- Sensori® thermostatic control

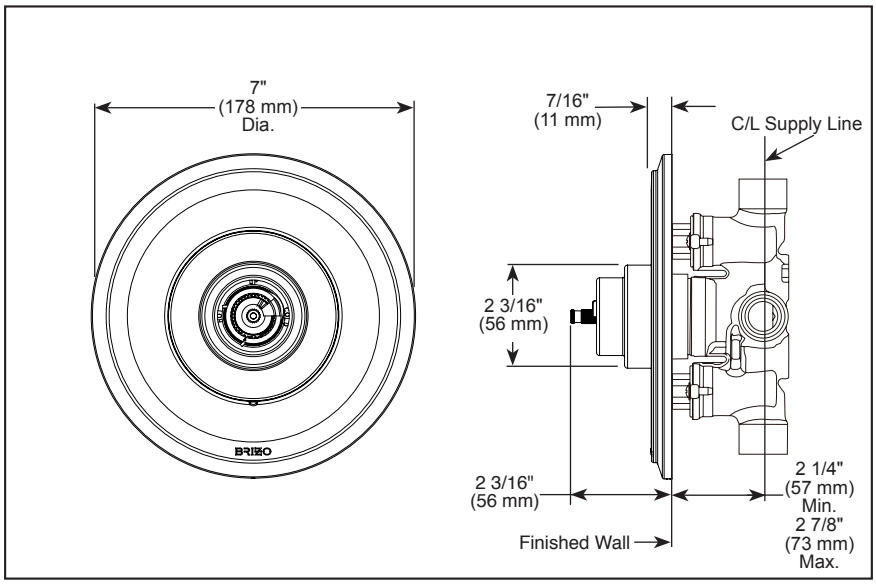

STANDARD SPECIFICATIONS:

- Must also order R35000-WS rough valve body
- Includes Sensori® thermostatic cartridge
- Thermostatic wax element maintains the outlet temp to +/- 3.6˚ F
- Handle controls temperature only; must be used with one or more Sensori® volume controls
- Field adjustable to limit rotation into hot water zone
- All parts are replaceable from the front of the valve
- Adjusts for up to 5/8" wall thickness. Optional extension kit (RP72604) available.
- Must order handles separately. See handle options below.

WARRANTY

- Parts and Finish - Lifetime limited warranty; or for commercial purchasers, 10 years for multi-family residential (apartments and condominiums) and 5 years for all other commercial uses, in each case from the date the product is received by the original purchaser or their authorized representative (installation contractor, etc.).
- Please go to www.brizo.com for the complete details of our limited warranty.

COMPLIES WITH:

- ASME A112.18.1 / CSA B125.1
- ASSE 1016 / ASME A112.1016 / CSA B125.16
- ♿ ICC/ANSI A117.1

HL6642-▲ Lever Handle ♿

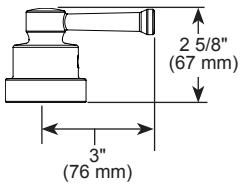

HX6642-▲ Cross Handle ♿

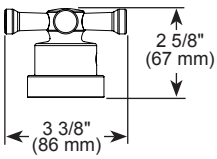

RP72604 Available Extension Kit

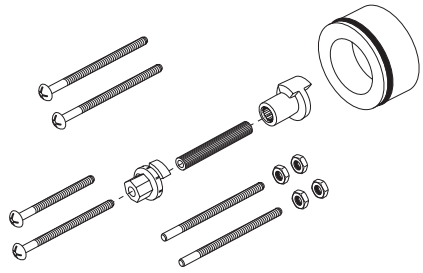

*Depending on the location of valve within the wall and wall thickness an optional extension kit (RP72604) can provide an additional 1 3/4" of wall thickness.

▲ Designate proper finish suffix

Brizo Kitchen & Bath Company reserves the right (1) to make changes in specifications and materials, and (2) to change or discontinue models, both without notice or obligation. Dimensions are for reference only. See current full-line price book or www.brizo.com for finish options and product availability.

BSP-B-T66T042-LHP Rev. E

Brizo Kitchen & Bath Faucet Company
55 E. 111th Street, Carmel, IN 46280
350 South Edgeware Road, St. Thomas, ON N5P 4L1
© 2025 Brizo Kitchen & Bath Faucet Company